linear dimension(Tolerances Standard GB/T 14486-2008)								—	▱	⊥
variable range	to 6	over 6 to 10	over 10 to 30	over 30 to 60	over 60 to 100	over 100 to 160	over 160 to	to 10	over 10 to 100	over 100 to
tolerance	±0.20	±0.30	±0.50	±0.70	±1.00	±1.30	±1.60	0.10	0.30	0.60

REVISION RECORD				
REV.	DESCRIPTION	ECN No.	APPROVED	DATE
A	新发行		CLF	21.03

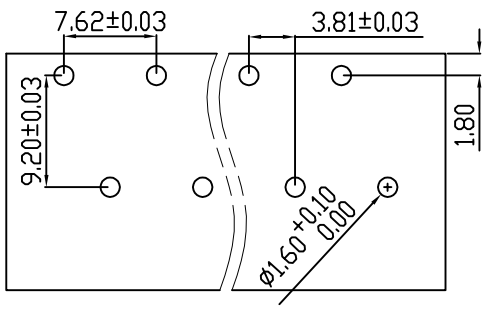

PCB LAYOUT

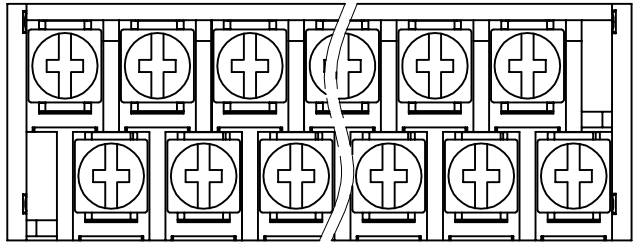

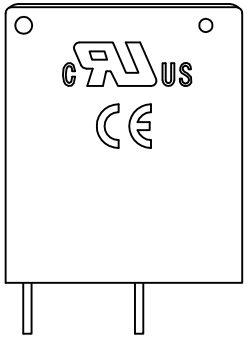

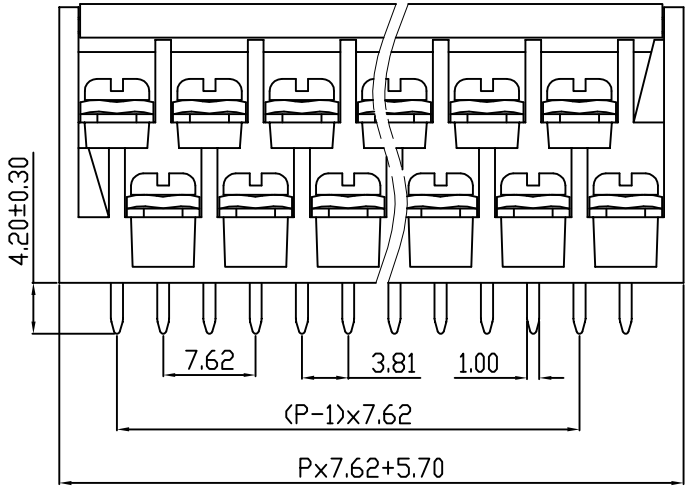

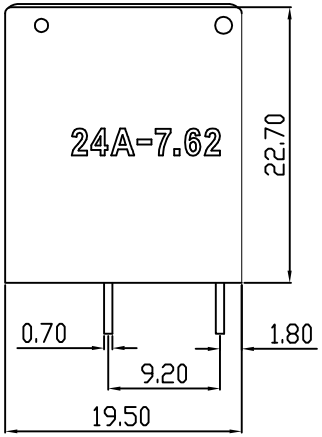

UL/CUL 技术 参数 UL/CUL Technical Data			
等 级 Use Group	B	C	D
额定电压 Rated Voltage [V]	300	-	-
额定电流 Rated Current [A]	15	-	-
接线范围 Wire Range 单/多芯线 Solid/Stranded [AWG]	22-14		
IEC 技术参数 IEC Technical Data			
额定电压 Rated Voltage [V]	250		
额定电流 Rated Current [A]	24		
耐电压 Withstanding Voltage	2000V/1Min		
导线截面积 Conductor cross section 硬质/柔性导线 Solid/ flexible [mm²]	2.5		
材 料 Material			
绝缘材料 Insulation Material	PBT		
阻燃等级 Imflammability	UL94V-0		
导体材料 Contactor Material	铜合金 Copper alloy		
导体表面镀层 Contactive Coating	镀锡 Tin plating		
一般参数 Other Data			
间距 Pitch [mm]	7.62		
极数 Poles [P]	2-24		
剥线长度 Stripping Length [mm]	-		
螺丝 Screw/扭矩 Torque(Max) [N.m]	M3/0.8		
工作温度 Operating temperatur [°C]	-40~+130		
引针尺寸 Pin Dimensions [mm]	4.2		
PCB板孔径 PCB Hole Diameter [mm]	1.6		

DES.	LQQ	DATE	21.12.15	单位 / UNITS	mm	尺寸 / SIZE	A4	比例 / SCALE	1:1	第三视角/THIRD ANGLE PROJECTION
CHK.	BY	DATE	21.12.15	SHANGHAI SHANGYE ELECTRONICS CO,LTD						版本 / REV: A
APP.	CLF	DATE	21.12.15							名称 / TITLE: 24A-7.62