| linear dimension(Tolerances Standard GB/T 14486-2008) | | | | | | | | — | ⏥ | ⊥ |
|---|---|---|---|---|---|---|---|---|---|---|
| variable range | to 6 | over 6 to 10 | over 10 to 30 | over 30 to 60 | over 60 to 100 | over 100 to 160 | over 160 to | to 10 | over 10 to 100 | over 100 to |
| tolerance | ±0.20 | ±0.30 | ±0.50 | ±0.70 | ±1.00 | ±1.30 | ±1.60 | 0.10 | 0.30 | 0.60 |

| REVISION RECORD | | | | |
|---|---|---|---|---|
| REV. | DESCRIPTION | ECN No. | APPROVED | DATE |
| A | 新发行 | | CLF | 21.03 |
| | | | | |
| | | | | |
| | | | | |

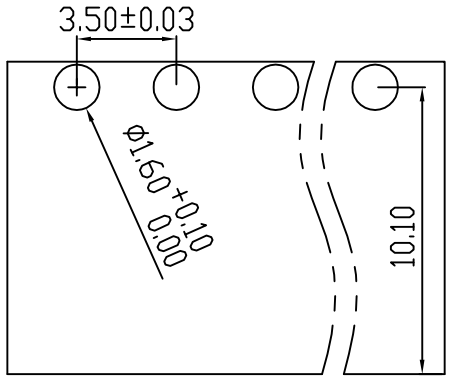


PCB LAYOUT

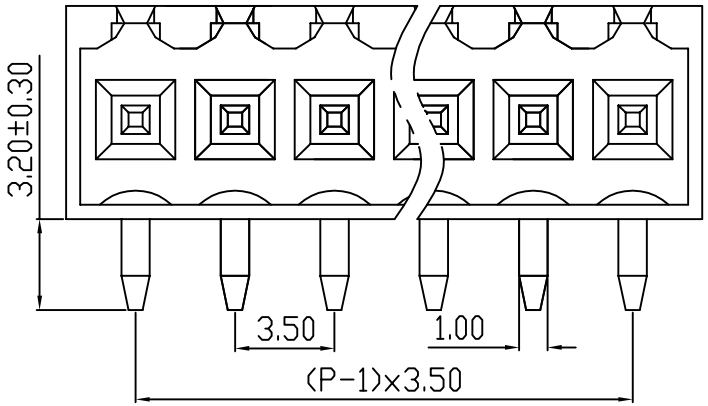


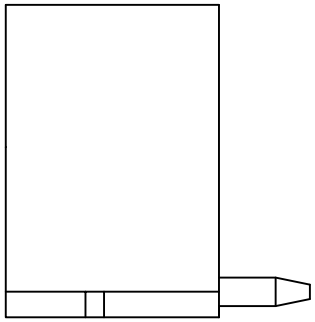

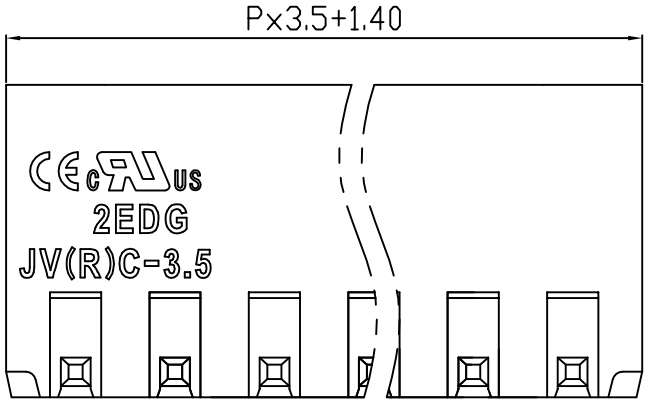


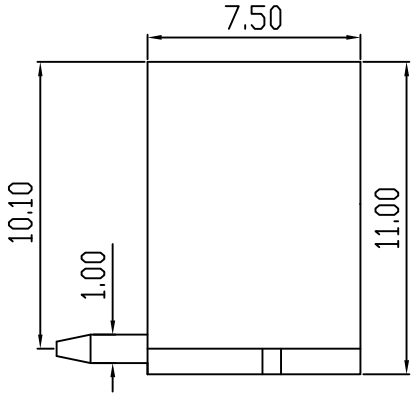


| UL/CUL 技术 参数<br>UL/CUL Technical Data | | | |
|---|---|---|---|
| 等 级 Use Group | B | C | D |
| 额定电压 Rated Voltage [V] | 300 | - | 300 |
| 额定电流 Rated Current [A] | 10 | - | 10 |
| 接线范围 Wire Range<br>单/多芯线 Solid/Stranded [AWG] | - | | |
| 耐电压 Withstanding Voltage | 1600V/1Min | | |
| IEC 技术参数<br>IEC Technical Data | | | |
| 过电压类别 Overvoltage Category | III | III | II |
| 污染等级 Contamination Class | 3 | 2 | 2 |
| 额定电压 Rated Voltage [V] | - | 160 | 320 |
| 额定电流 Rated Current [A] | - | 13 | 13 |
| 额定冲击电压<br>Impulse withstand voltagea [KV] | - | 2.5 | 2.5 |
| 导线截面积 Conductor cross section<br>硬质/柔性导线 Solid/ flexible [mm²] | - | | |
| 材 料 Material | | | |
| 绝缘材料 Insulation Material | PA66 | | |
| 阻燃等级 Imflammability | UL94V-0 | | |
| 导体材料 Contactor Material | 铜合金 Copper alloy | | |
| 导体表面镀层 Contactive Coating | 镀锡 Tin Plated | | |
| 一般参数 Other Data | | | |
| 间距 Pitch [mm] | 3.5 | | |
| 极数 Poles [P] | 02~24 | | |
| 剥线长度 Stripping Length [mm] | - | | |
| 螺丝 Screw/扭矩 Torque(Max) [N.m] | - | | |
| 工作温度 Operating temperatur [°C] | -40~+105 | | |
| 引针尺寸 Pin Dimensions [mm] | 3.2 | | |
| PCB板孔径 PCB Hole Diameter [mm] | 1.6 | | |

| | | | | | | | | | | |
|---|---|---|---|---|---|---|---|---|---|---|
| DES. | FZM | DATE | 21.03.15 | 单位/UNITS | mm | 尺寸/SIZE | A4 | 比例/SCALE | 1:1 | 第三视角/THIRD ANGLE PROJECTION | 版本/REV | A |
| CHK. | SY | DATE | 21.03.15 | SHANGHAI SHANYE ELECTRONICS CO,LTD | | | | | | 名称/TITLE | 2EDGJRC-3.5 | |
| APP. | CLF | DATE | 21.03.15 | | | | | | | | | |