linear dimension(Tolerances Standard GB/T 14486-2008)								—	▱	⊥
variable range	to 6	over 6 to 10	over 10 to 30	over 30 to 60	over 60 to 100	over 100 to 160	over 160 to	to 10	over 10 to 100	over 100 to
tolerance	±0.20	±0.30	±0.50	±0.70	±1.00	±1.30	±1.60	0.10	0.30	0.60

REVISION RECORD				
REV.	DESCRIPTION	ECN No.	APPROVED	DATE
A	新发行		CLF	21.03

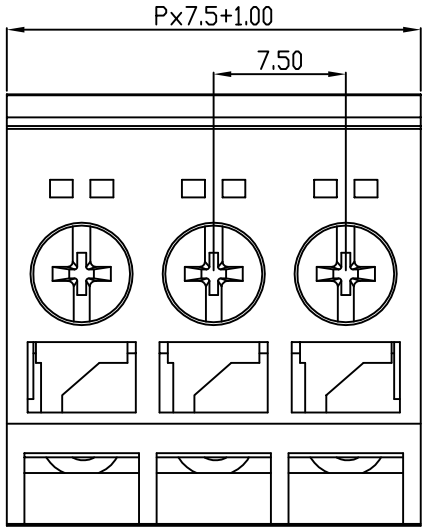

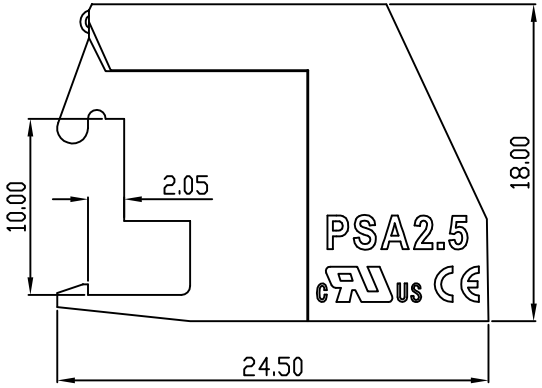

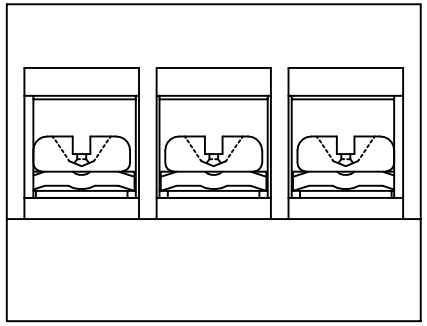

UL/CUL 技术 参数 UL/CUL Technical Data		B	C	D
等 级 Use Group		B	C	D
额定电压 Rated Voltage	[V]	300	-	-
额定电流 Rated Current	[A]	10	-	-
接线范围 Wire Range 单/多芯线 Solid/Stranded	[AWG]	24-14		
IEC 技术参数 IEC Technical Data				
额定电压 Rated Voltage	[V]	250		
额定电流 Rated Current	[A]	24		
耐电压 Withstanding Voltage		2000V/1Min		
导线截面积 Conductor cross section 硬质/柔性导线 Solid/ flexible	[mm²]	2.5		
材 料 Material				
绝缘材料 Insulation Material		PA66		
阻燃等级 Imflammability		UL94V-0		
导体材料 Contactor Material		铜合金 Copper alloy		
导体表面镀层 Contactive Coating		镀锡 Tin plating		
一般参数 Other Data				
间距 Pitch	[mm]	7.5		
极数 Poles	[P]	02/03		
剥线长度 Stripping Length	[mm]	8-10		
螺丝 Screw/扭矩 Torque(Max)	[N.m]	M3/0.5		
工作温度 Operating temperatur	[°C]	-40~+105		
引针尺寸 Pin Dimensions	[mm]	-		
PCB板孔径 PCB Hole Diameter	[mm]	-		

DES.	SJD	DATE	21.10.16	单位/UNITS	mm	尺寸/SIZE	A4	比例/SCALE	1:1	第三视角/THIRD ANGLE PROJECTION
CHK.	BY	DATE	21.10.16	SHANGHAI SHANYE ELECTRONICS CO,LTD						版本/REV: A
APP.	CLF	DATE	21.10.16							名称/TITLE: PSA2.5-7.5